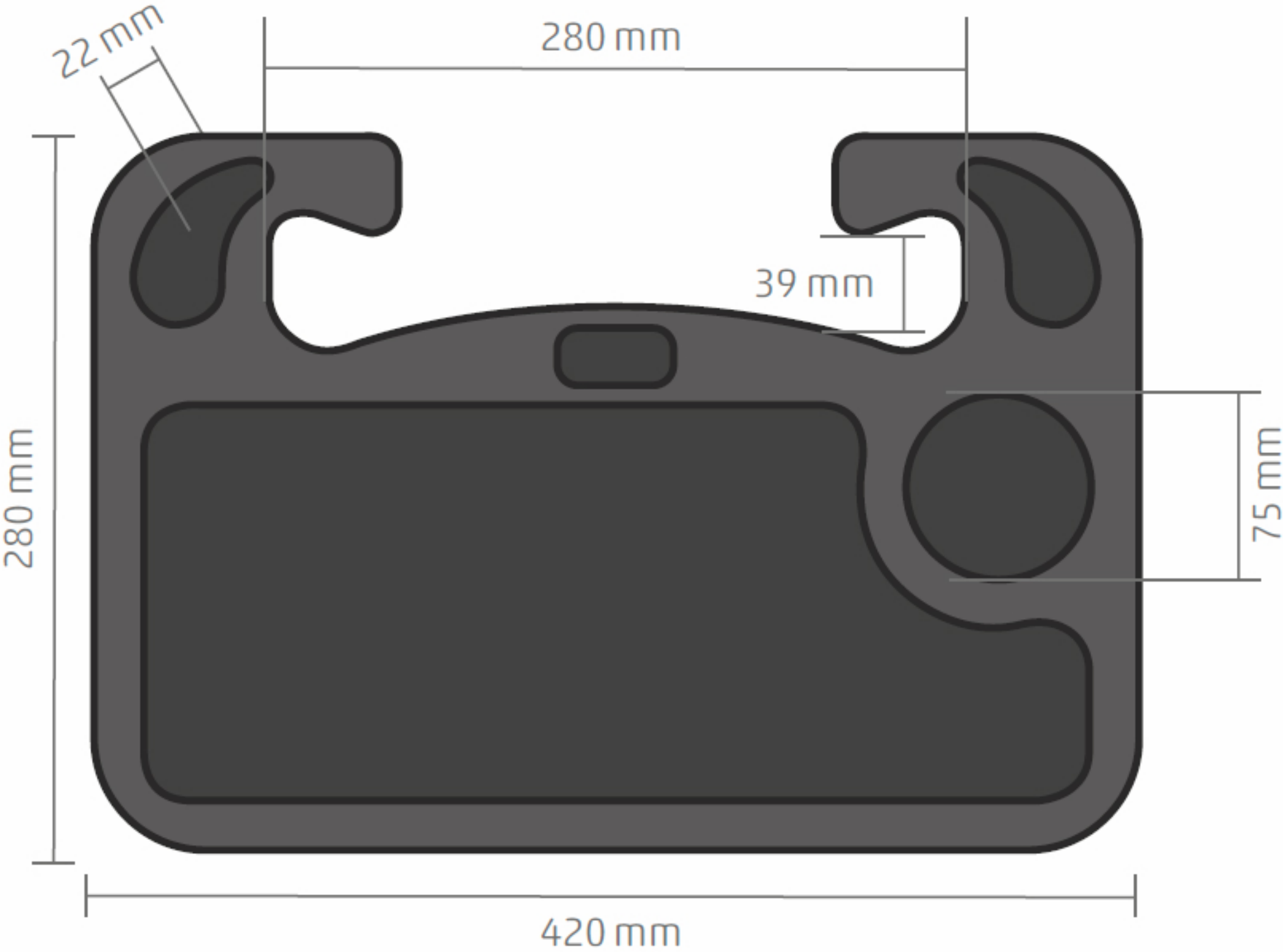
22 mm
280 mm
39 mm
280 mm
75 mm
420 mm